General Specifications - Model ABC65.0-XD20Y

Input Voltage	208/240/480/600 delta connection (4 wire)
Ouput Voltage	208/120 wye (5 wire)
Frequency	60 Hz. only
Continuous Capacity	65 kVA
BTU/Hr. Output	3329
Efficiency	>98.5% (at full load, unity power factor
Step Load Change	± 0.8% (at unity power factor)
Noise Rejection	With unit under power and the isolation transformer configured for a transformation ratio of 1:1 and with an ANSI/IEEE C62.41, Category A pulse applied either normal mode or common mode at the input, the noise output voltage will be less than 10 volts normal mode and less than .5 volts (½ of one volt) common mode in all four quadrants (CM-NM, NM-NM, CM-CM, NM-CM).
Surge Voltage Withstand	Tested under power to ANSI/IEEE C62.41, Category A & B (formerly IEEE587-1980). Power conditioner tested to withstand up to 6000 volts @ 3000 amp ringwave and unipo lar impulse.
Construction Materials	Transformer wires are copper and insulated with Class H materials. Windings are insu lated with Nomex paper insulation before vacuum varnishing. Internal wiring is a mini mum of 200 degree C rated and sleeved with Class H materials. Grain oriented silicon iron cores are constructed using 14 mil. laminations interleaved one to one. Eddy currents are minimized and external magnetic fields are below 0.1 oersted (at 12 inches distance in any direction). **Unit is RoHS compliant.**
Physical Dimensions H x W x D - inches (mm.)	47 x 22 x 39 (1194 x 559 x 990)
Weight in lbs. (kg.)	1250 (568)

Input Connection Requirements*

Input Voltage	Input Current (FLA)	Supply Breaker Rating @ Switchgear	AIC (Current Interrupt Capacity of Input Circuit Breaker)	Minimum Input Conductor Size (includes ground)	Input Lug Maximum Wire Size
208	180	225	25 kAmps	3/0	250 kCMIL
240	157	200	25 kAmps	3/0	250 kCMIL
480	78	100	25 KAmps	3 AWG	250 kCMIL
600	63	80	25 kAmps	4 AWG	250 kCMIL

** Supply breaker ratings are determined by NEC guidelines limiting breaker loading to 80% of rated breaker capacity. Calculations for supply breaker recommended ratings are based on input full load amps multiplied by 1.25 and then selecting the next larger standard size breaker. Wire sizes shown in the input and output connection tables of this specification sheet are the minimum sizes allowed by electrical codes for each supply breaker rating and are taken from the 2002 National Electrical Code Article 310.16 table references for use in 90^0 C installations.*

POWERVAR
Solutions for Power Quality®

1450 Lakeside Drive, Waukegan, IL 60085
(847) 596 - 7000 - (Outside Illinois 800 - 369-7179), Fax (847) 596 - 7100
www.powervar.com

Output Connection Requirements*

Output Voltage	Output Current (FLA)	Minimum Output Conductor Size (includes ground)	Output Lug Maximum Wire Size
208/120	181	2/0	2/0

Breaker Trip Current Programming (when applicable)

Some models of power conditioner may support an optional programmable circuit breaker. If so equipped reconfiguring the settings of a programmable circuit breaker (when required) is accomplished by changing the settings of DIP switch pack **I1** on the front of the circuit breaker. Each circuit breaker has a maximum ampacity rating, and the DIP switches may be set to program the circuit breaker to trip at increments of 100%, 95%, 90%, 80%, 70%, 60%, 50%, and 40% of the breaker's maximum input ampacity as shown to the left below. The input circuit breaker of each model of GPI Series 2000 is programmed for the appropriate trip current as determined by the input voltage available at the installation site. Consult the following table.

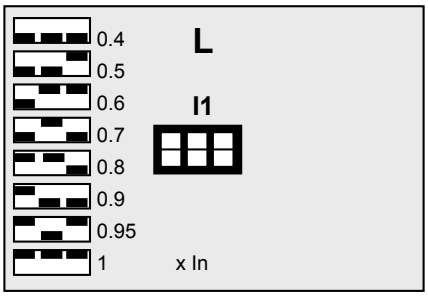

Input Voltage (L-L)	Breaker Frame ID	Breaker Setting In amps	L1 DIP Switch Setting
208	S4	175	
240	S4	150	
480	S4	80	
600	S4	70	

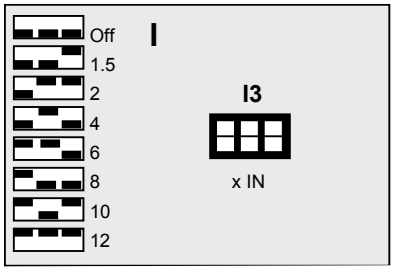

DIP switch pack **I3** defines the circuit breaker's inrush current capability. I3 consists of three DIP switches, which allow the breaker to be programmed to accommodate inrush current characteristics from zero to twelve times its rated steady state ampacity as shown to the left. The GPI Series 2000 utilizes a low impedance isolation transformer, which, when energized, results in substantial short-term inrush current. I3 DIP switches are factory set so that the circuit breaker is configured for maximum inrush current capability. POWERVAR recommends that these settings not be changed without first consulting POWERVAR Technical Support.

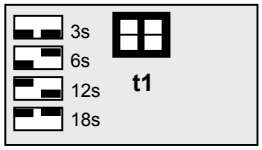

DIP switch pack **t1** determines the circuit breaker's response time to an overload condition. Response times of three seconds, six seconds, twelve seconds, and eighteen seconds may be selected as shown to the left. The t1 DIP switches are factory set for a response time of eighteen seconds. POWERVAR recommends that these settings not be changed without first consulting POWERVAR Technical Support.

VAC	Connect each phase
208	H1 to H3-4, H2 to H1-4 and H3 to H2-4
240	H1 to H3-3, H2 to H1-3 and H3 to H2-3
480	H1 to H3-2, H2 to H1-2 and H3 to H2-2
600	H1 to H3-1, H2 to H1-1 and H3 to H2-1

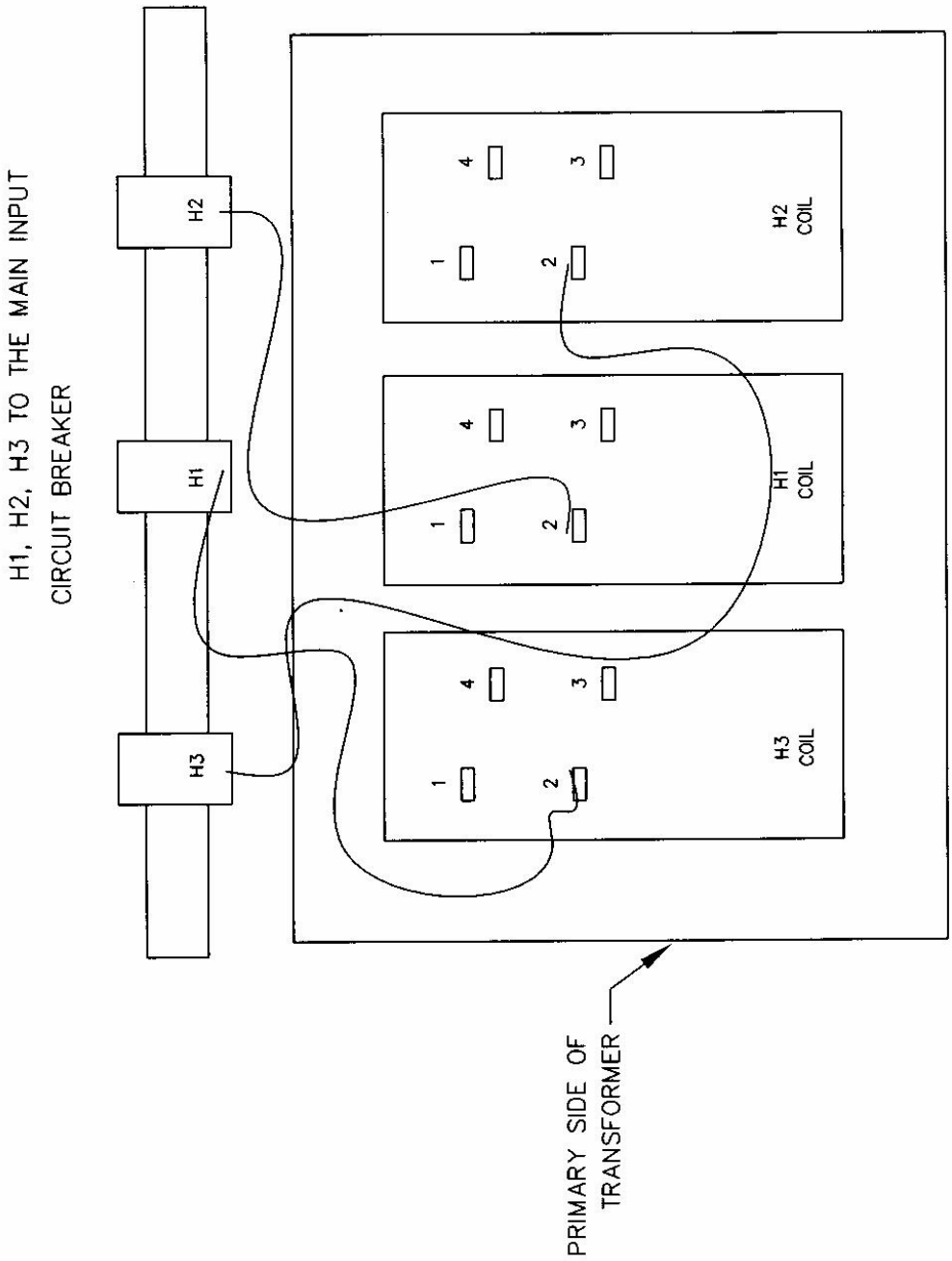

Transformer Primary Connections

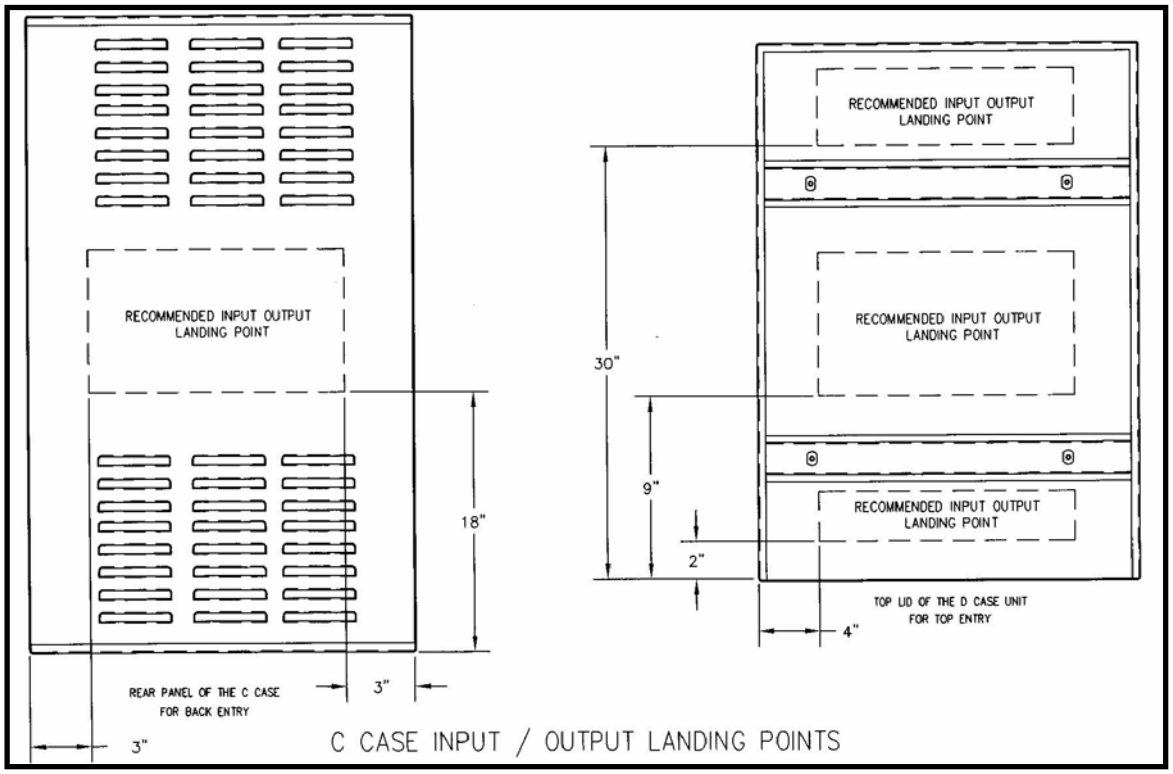

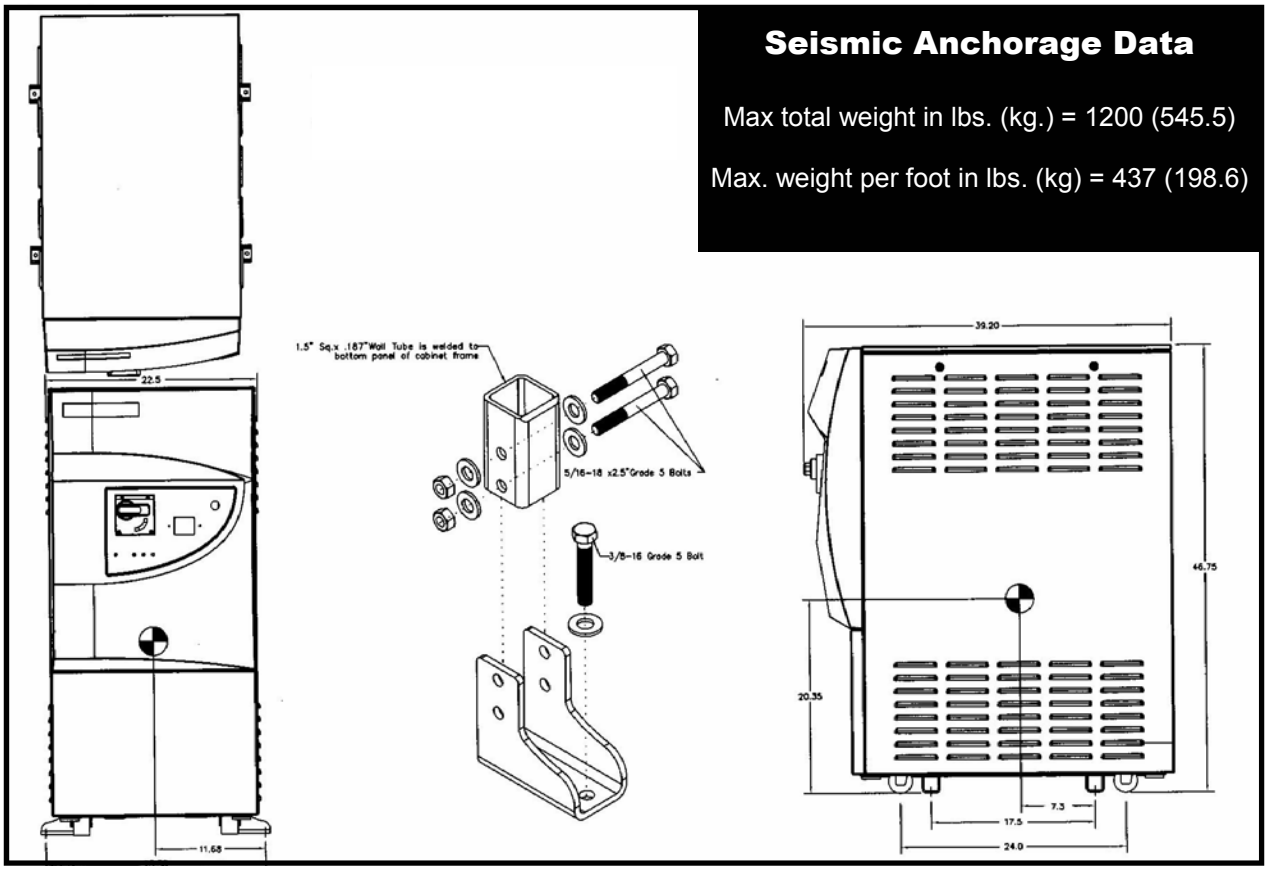

Seismic Anchorage Data

Max total weight in lbs. (kg.) = 1200 (545.5)

Max. weight per foot in lbs. (kg) = 437 (198.6)