POWERVAR
Solutions for Power Quality®

SPECIFICATIONS

International Ground Guard® Conditioners - "C" Case Enclosure

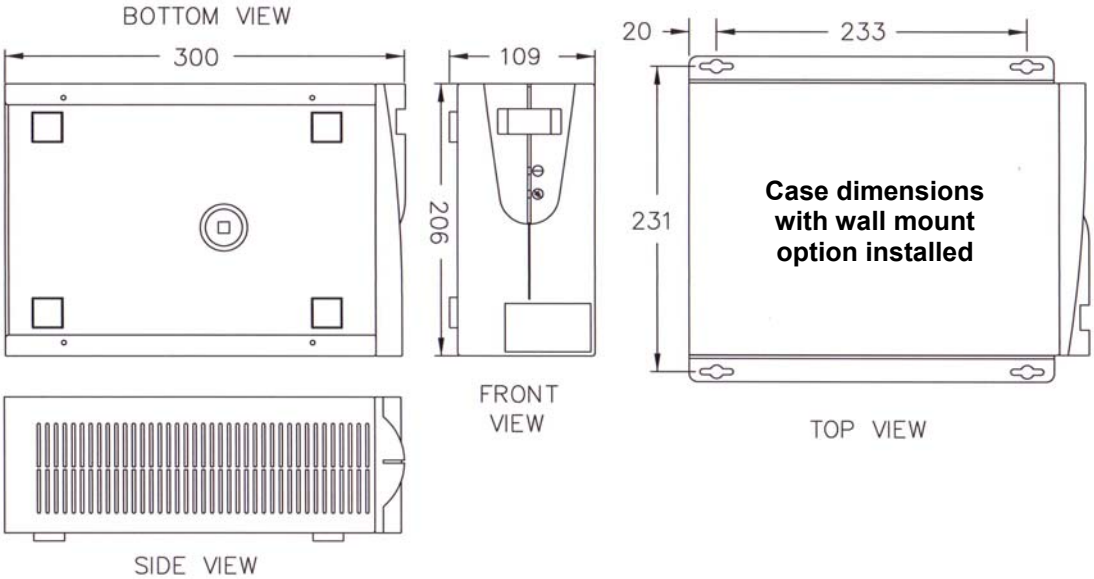

	ABCG500-22INT Part # 92021-XXR	ABCG750-22INT Part # 92031-XXR
VA Rating	500	750
Frequency	50/60 Hz.	50/60 Hz.
BTU/Hr. Output	85	128
T.H.D. % Added	<1%	<1%
Load Surge Current @		
1/2 cycle	100 amps	130 amps
1 second	48 amps	62 amps
10 seconds	14 amps	18 amps
Input Voltage	200-264	200-264
Output Voltage	200-264	200-264
Output Current	2.08 amps	3.12 amps
Efficiency	95%	95%
Voltage Drop No Load to Full Load	7.2%	6%
Wall mountable*	Yes	Yes
Compliance	VDE, CE, RoHS	VDE, CE, RoHS
Shipping Weight (kgs.)	9	10

* When ordering by model number, add "W" to model number above for wall mount option.

POWERVAR
Solutions for Power Quality®

SPECIFICATIONS

International Ground Guard® Conditioners - "C" Case Enclosure

POWERVAR Part #
ABCG500-22 - 92021-XX*R
ABCG750-22 - 92031-XX*R

*When ordering, add two digit number from below in place of **XX** to specify option desired.

Option 1

-01 - Two IEC320 receptacle strips with Shuko plug
-21 - Two IEC320 receptacle strips with Shuko plug and wallmount adapter

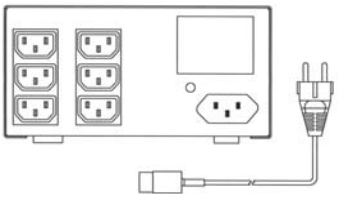

Option 2

-03 - Two IEC320 receptacle strips with two output cords
-23 - Two IEC320 receptacle strips with two output cords and wallmount adapter

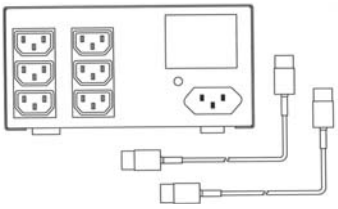

Option 3

-04 - Shuko plug with Shuko receptacle
-24 - Shuko plug with Shuko receptacle and wallmount adapter

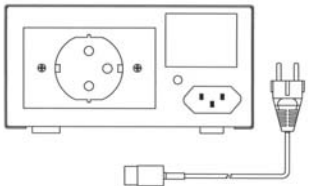

NOISE REJECTION-ISOLATION: With unit under power and an ANSI/IEEE C62.41Cat. A pulse applied either normal or common mode at the input, the noise output voltage will be less than 10V normal mode and less than 0.5V common mode in all four quadrants (CM-NM, NM-NM, CM-CM, NM-CM).
SURGE WITHSTAND CAPABILITY: Tested under power to ANSI/IEEE C62.41 Cat. A & B (formerly IEEE587-1980). Cat. A - 6000V @ 200 amps, 0.5 usec risetime, 100 kHZ decay, Cat. B - 6000V @ 500 amps, 0.5 usec risetime, 100 kHZ decay.
GROUND CURRENT ATTENUATION: Disturbance current coupling into ground conductors is limited to .1% (one tenth of one percent) of the amplitude of the source disturbance current.
GROUND IMPEDANCE SAFETY CHARACTERISTICS: Under worst case capacitive or inductive load conditions, when presented with a worst case fault current of 50% above the branch circuit breaker rating, the control impedance must not exhibit a voltage drop across itself of more than 2.5 volts

Warranty/Support: POWERVAR warrants its power conditioners to be free from defects in materials and workmanship for a period of five years from the date of shipment. For North American service or support on any POWERVAR product, please contact POWERVAR Technical Support at (800) 369-7179 (in Illinois call (847-596-7000). For service and support in EMEA, contact POWERVAR, Ltd. in the United Kingdom at +44 (0) 1793 553980. Or visit the POWERVAR website at **www.powervar.com**.

POWERVAR, Inc. - 1450 Lakeside Drive, Waukegan, IL 60085
POWERVAR, Ltd. - Unit 5 Birch, Kembrey Park, Swindon, Wiltshire, UK SN2 8UU